KLS electronic
www.cnkls.com

AC INLET Series

KLS1-AS-301-2 IEC AC INLET Series

SPECIFICATION:

Current Rating: 250V AC 10A
Contact Resistance: 30mΩ Max.
Insulator Resistance: 100MΩ Min. at DC 500V
Dielectric withstand Strength test: 2000VAC / 1 minute between each terminals
Insertion and Removal force: 5 ~ 40N
Operating Temperature: -30ºC~+70ºC
Electrical Life: 5000 cycles Min.

Material:

Insulator: PBT UL 94V-0 or PA66/PC UL 94V-0
Terminal: Brass ,plating Ni.

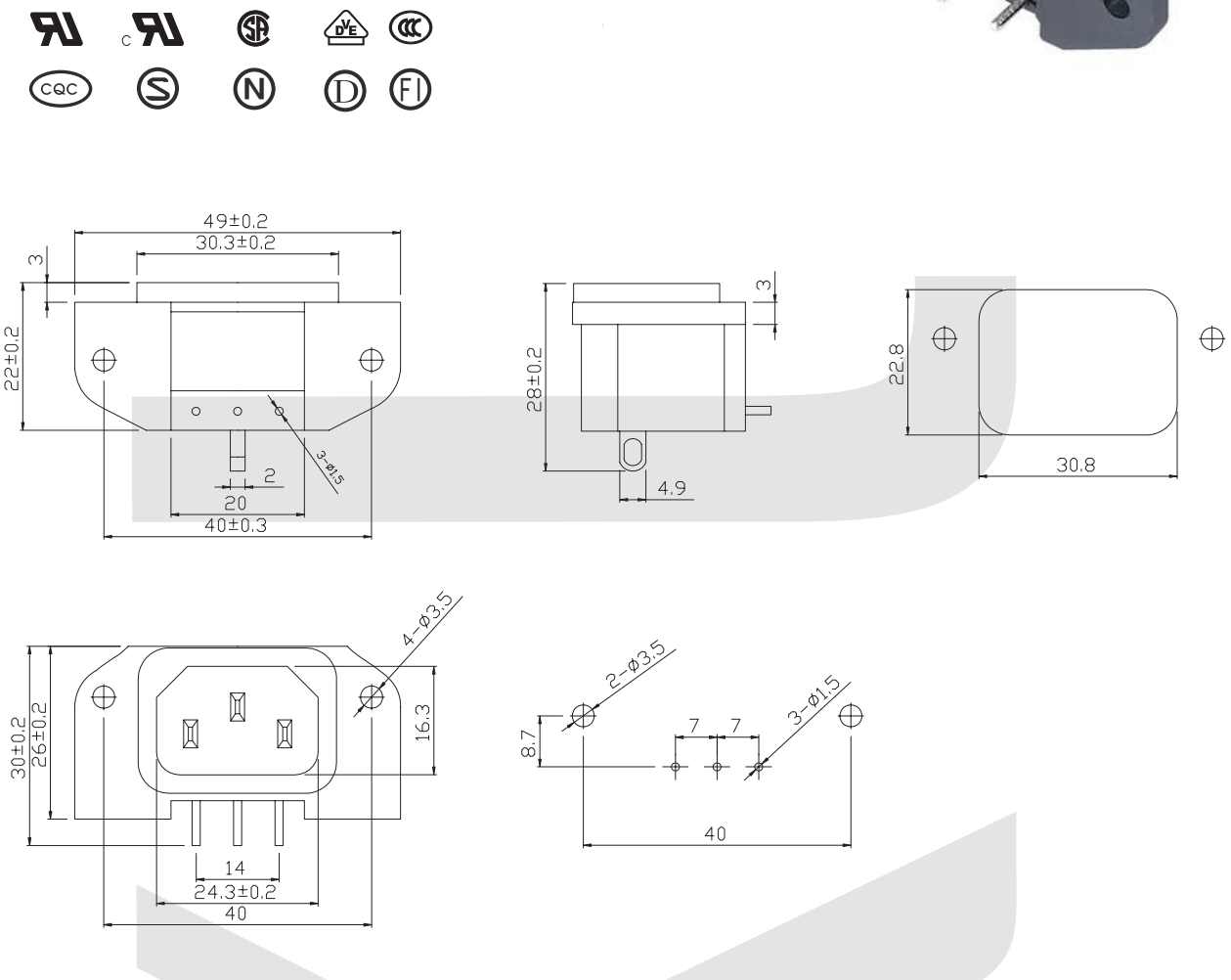

ORDER INFORMATION

Product NO.: KLS1-AS-301-2

Pos. NO.

AC Inlet Type